SLP Series 2/2-Way Pilot Operated Solenoid Valve

●The Professional Solenoid Valves Manufactory

Solenoid Valves Numbering System for Order

Position description	1	2	3	4	5	6	7	8	9	10
	Valve Series	Mode of Operation	Coil Type	Coil Class	Voltage	Seal Material	Body Material	Pipe Size	Orifice (mm)	Options
E.G.	SLP	1	D	F	02	N	1	E	20	□
	SLP Series	1: Normally Closed 2: Normally Open	D: DIN Standard Connections, Fully Encapsulated N: Lead Wires, Water-tight, Fully Encapsulat X: Explosion-proof S: NASS Coil	F: Class H: Class	02= AC220V AC230V 01= AC110V AC120V 05= AC24V 12= DC12V 13= DC24V Contact the Factory for Others	N: NBR V: VITON E: EPDM	1= Forged Brass 3= SS316 9=Forged Braaa Note: "9" is only for Normally open valve in small size	A=1/8" B=1/4" B=1/4" C=3/8" D=1/2" E=3/4" G=1" H=1 1/4" J=1 1/2" K=2" F= Flange Connection A=1/8" B=1/4"	03=3.0 05=5.0 06=6.0 C9=10.5 05=5.0 06=6.0 C9=10.5 13=13.0 20=20.0 25=25.0 35=35.0 40=40.0 50=50.0 25=25.0 35=35.0 40=40.0 50=50.0 01=1.0 C2=1.5 C3=2.5 03=3.0 04=4.0	M= Manual Override L= Neon lamp K= Mounting Bracket N= NPT thread

Note: See the detailed parameters, suchas orifice, Fluid Tem, min pressure etc, coil characteristics please refer to page 33.

SLP Compact Series 2/2-Way Direct Acting Solenoid Valve · Noramally Closed

●The Professional Solenoid Valves Manufactory

1: 2-Way normally closed solenoid valve, Closed when de-energized, open when energized.
2: Serialized products, small in size, large flow rate, widely use
3: Body material: forged brass.316 stainless steel.
4: Ambient Temp. 0℃~65℃, Feuids Temp 0℃~130℃
5: Flow as the arrow, mounts in any position; Best position is solenoid vertical and upright direction.
6: Voltage: 220VAC/230VAC/240VAC/110VAC/24VAC 50/60HZ 24VDC/12VDC; Voltage Tolerance: +10% to -10% applicable voltage
7: This series valves are offered NBR、VITON、EPDM etc for Seals and diaphragm to provide on-off control of various fluids.

Normally closed

De-energized
Open

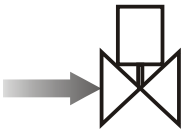

Energized
Closed

Construction, External Dimensions Chart

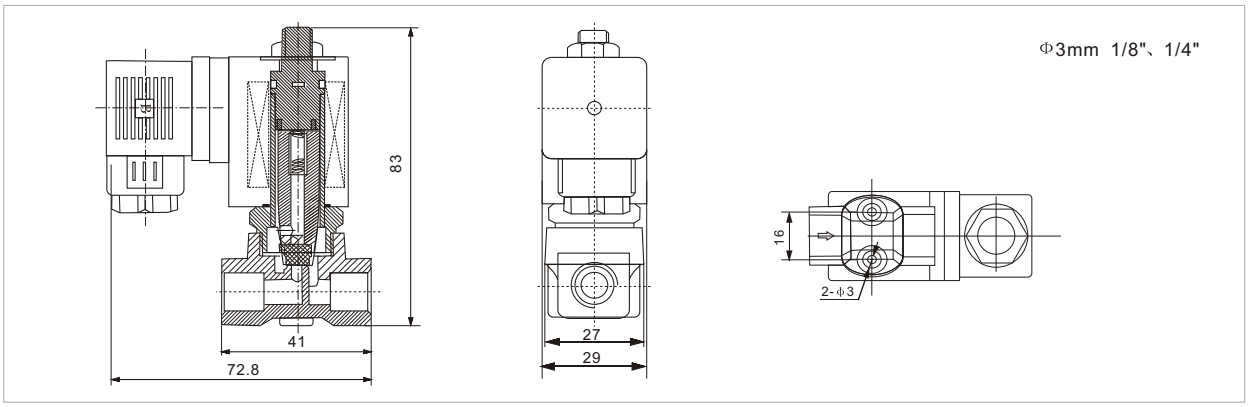

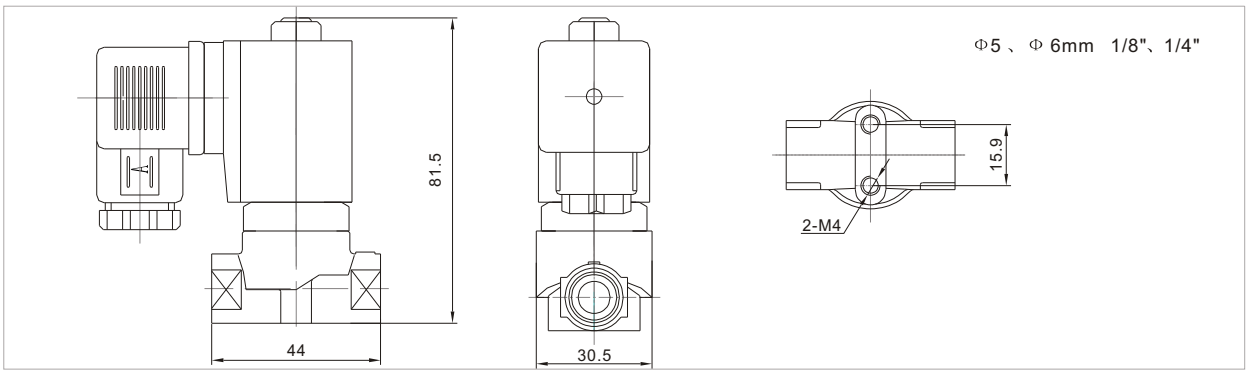

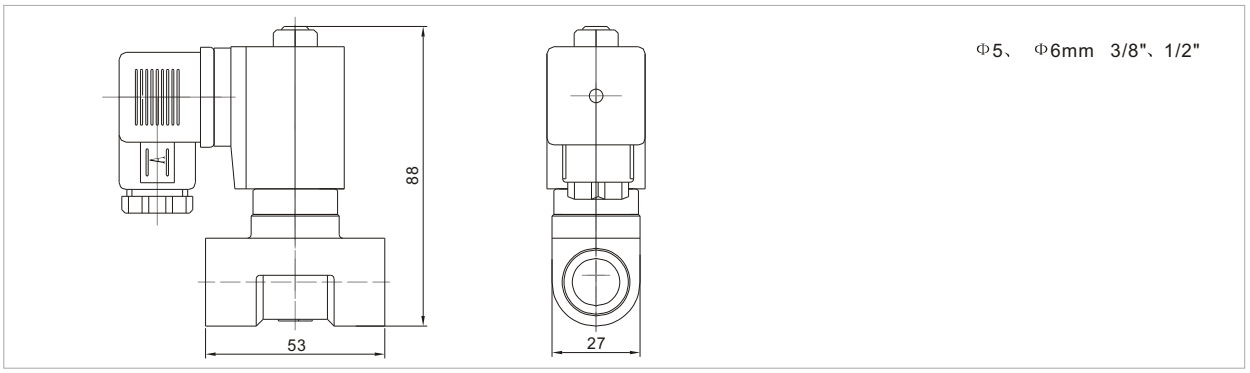

SLP Compact 2/2-Way Direct Acting Solenoid Valve · Normally Closed

●The Professional Solenoid Valves Manufactory

Valve Selection List

Pipe Conn -ection	Orifice mm	CV Factor	Operating pressure differential (kgf/cm²) Min.	Max. Air Gas AC	Max. Air Gas DC	Max. Water Hot water Liquids AC	Max. Water Hot water Liquids DC	Max. Light oil ≤ 20CST AC	Max. Light oil ≤ 20CST DC	Max. Temp. ℃	Coil Type	Power consumption VA AC 220V	Power consumption W DC 24V	Coil Class	Model Code Follows Voltage are 220VAC Body material: Forgeda brass	Model Code Follows Voltage are 220VAC Body material: Steel SS304	Weight KG
1/8″	3	0.23	0	13	13	13	13	10	10	80	D	22	13	F	SLP1DF02N1A03	SLP1DF02N3A03	0.37
	3	0.23	0	13	13	13	13			130	D	22	13	F	SLP1DF02E1A03	SLP1DF02E3A03	0.37
	3	0.23	0	13	13	13	13	10	10	120	D	22	13	F	SLP1DF02V1A03	SLP1DF02V3A03	0.37
	5	0.65	0	4	2.5	4	2.5	2.5	2	80	D	22	13	F	SLP1DF02N1A05	SLP1DF02N3A05	0.36
	5	0.65	0	4	2.5	4	2.5			130	D	22	13	F	SLP1DF02E1A05	SLP1DF02E3A05	0.36
	5	0.65	0	4	2.5	4	2.5	2.5	2	120	D	22	13	F	SLP1DF02V1A05	SLP1DF02V3A05	0.36
	6	0.8	0	3	2	3	2	2.5	2	80	D	22	13	F	SLP1DF02N1A06	SLP1DF02N3A06	0.36
	6	0.8	0	3	2	3	2			130	D	22	13	F	SLP1DF02E1A06	SLP1DF02E3A06	0.36
	6	0.8	0	3	2	3	2	2.5	2	120	D	22	13	F	SLP1DF02V1A06	SLP1DF02V3A06	0.36
1/4″	3	0.23	0	13	13	13	13	10	10	80	D	22	13	F	SLP1DF02N1B03	SLP1DF02N3B03	0.36
	3	0.23	0	13	13	13	13			130	D	22	13	F	SLP1DF02E1B03	SLP1DF02E3B03	0.36
	3	0.23	0	13	13	13	13	10	10	120	D	22	13	F	SLP1DF02V1B03	SLP1DF02V3B03	0.36
	5	0.65	0	4	2.5	4	2.5	2.5	2	80	D	22	13	F	SLP1DF02N1B05	SLP1DF02N3B05	0.35
	5	0.65	0	4	2.5	4	2.5			130	D	22	13	F	SLP1DF02E1B05	SLP1DF02E3B05	0.35
	5	0.65	0	4	2.5	4	2.5	2.5	2	120	D	22	13	F	SLP1DF02V1B05	SLP1DF02V3B05	0.35
	6	0.8	0	3	2	3	2	2.5	2	80	D	22	13	F	SLP1DF02N1B06	SLP1DF02N3B06	0.35
	6	0.8	0	3	2	3	2			130	D	22	13	F	SLP1DF02E1B06	SLP1DF02E3B06	0.35
	6	0.8	0	3	2	3	2	2.5	2	120	D	22	13	F	SLP1DF02V1B06	SLP1DF02V3B06	0.35
3/8″	5	0.65	0	4	2.5	4	2.5	2.5	2	80	D	22	13	F	SLP1DF02N1C05	SLP1DF02N3C05	0.46
	5	0.65	0	4	2.5	4	2.5			130	D	22	13	F	SLP1DF02E1C05	SLP1DF02E3C05	0.46
	5	0.65	0	4	2.5	4	2.5	2.5	2	120	D	22	13	F	SLP1DF02V1C05	SLP1DF02V3C05	0.46
	6	0.8	0	3	2	3	2	2.5	2	80	D	22	13	F	SLP1DF02N1C06	SLP1DF02N3C06	0.46
	6	0.8	0	3	2	3	2			130	D	22	13	F	SLP1DF02E1C06	SLP1DF02E3C06	0.46
	6	0.8	0	3	2	3	2	2.5	2	120	D	22	13	F	SLP1DF02V1C06	SLP1DF02V3C06	0.46
1/2″	5	0.65	0	4	2.5	4	2.5	2.5	2	80	D	22	13	F	SLP1DF02N1D05	SLP1DF02N3D05	0.43
	5	0.65	0	4	2.5	4	2.5			130	D	22	13	F	SLP1DF02E1D05	SLP1DF02E3D05	0.43
	5	0.65	0	4	2.5	4	2.5	2.5	2	120	D	22	13	F	SLP1DF02V1D05	SLP1DF02V3D05	0.43
	6	0.8	0	3	2	3	2	2.5	2	80	D	22	13	F	SLP1DF02N1D06	SLP1DF02N3D06	0.43
	6	0.8	0	3	2	3	2			130	D	22	13	F	SLP1DF02E1D06	SLP1DF02E3D06	0.43
	6	0.8	0	3	2	3	2	2.5	2	120	D	22	13	F	SLP1DF02V1D06	SLP1DF02V3D06	0.43

SLP Compact Series · 2/2-Way Direct Acting Solenoid Valve · Normally Open

●The Professional Solenoid Valves Manufactory

1: 2-Way normally open solenoid valve, Closed when de-energized, open when energized.

2: Serialized products, small in size, large flow rate, widely use

3: Body material: forged brass.316 stainless steel.

4: Ambient Temp. 0℃~65℃, Fluids Temp 0℃~130℃.

5: Flow as the arrow, mounts in any position; Best position is solenoid vertical and upright direction.

6: Voltage: 220VAC/230VAC/240VAC/110VAC/24VAC 50/60HZ 24VDC/12VDC; Voltage Tolerance: +10% to -10% applicable voltage

7: This series valves are offered NBR、VITON、EPDM etc For Seals and diaphragm to provide on-off control of various fluids.

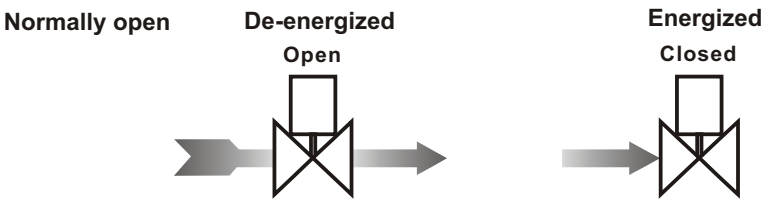

Construction, External Dimensions Chart

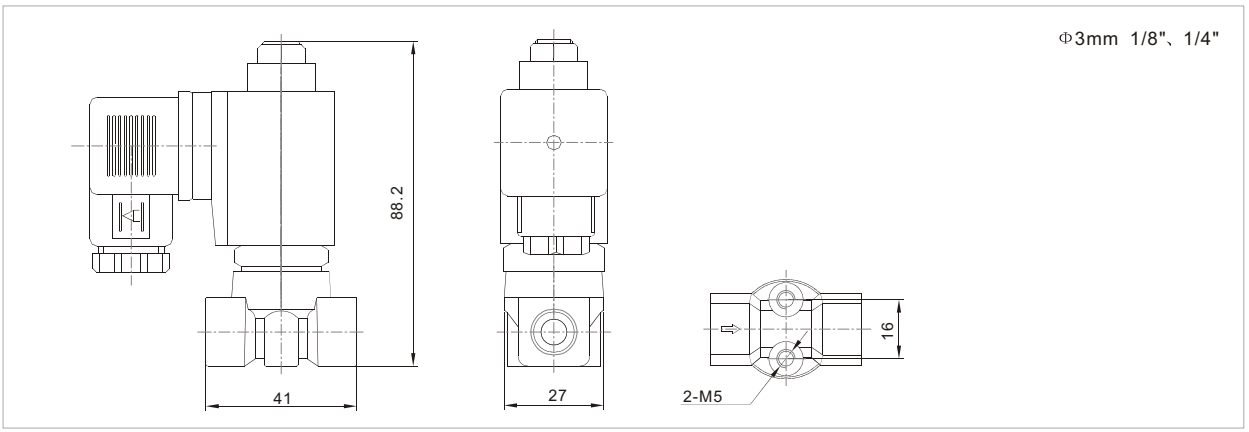

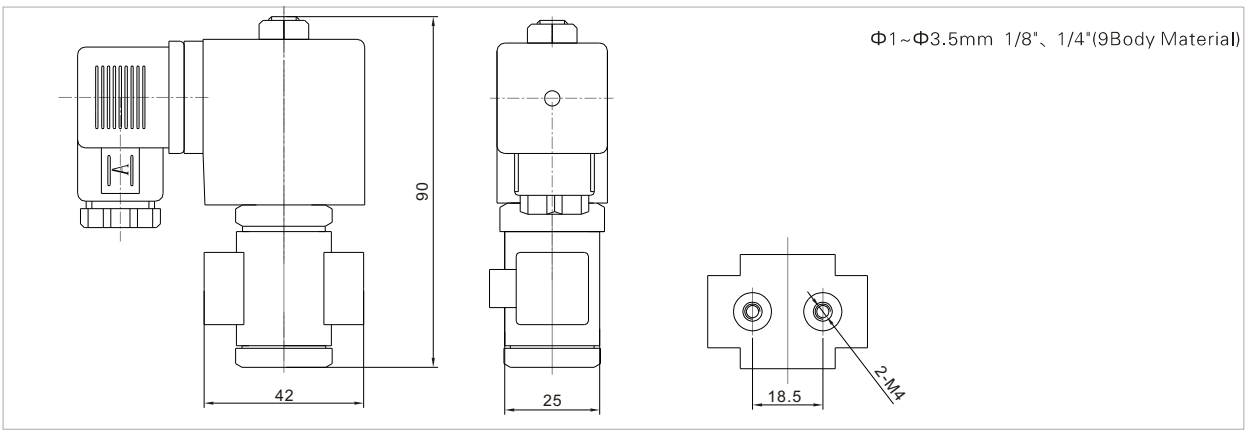

SLP Compact Series · 2/2-Way Direct Acting Solenoid Valve · Normally Open

● The Professional Solenoid Valves Manufactory

Valve Selection List

Pipe Conn -ection	Orifice mm	CV Factor	Operating pressure differential (kgf/cm²) Min.	Max. Air Gas	Max. Water Hot water Liquids	Max. Light oil	Max. Temp. ℃	Coil Type	consumption VA AC 220V	consumption W DC 24V	Coil Class	Model Code Follows Voltage are 220VAC Body material: Forgeda brass	Steel SS304	Weight KG
1/8"	1	0.04	0	30	30	25	80	D	22	13	F	SLP2DF02N9A01		0.4
	1	0.04	0	30	30		130	D	22	13	F	SLP2DF02E9A01		0.4
	1	0.04	0	30	30	25	120	D	22	13	F	SLP2DF02V9A01		0.4
	1.5	0.09	0	20	20	15	80	D	22	13	F	SLP2DF02N9AC2		0.4
	1.5	0.09	0	20	20		130	D	22	13	F	SLP2DF02E9AC2		0.4
	1.5	0.09	0	20	20	15	120	D	22	13	F	SLP2DF02V9AC2	———	0.4
	2.5	0.2	0	15	15	12	80	D	22	13	F	SLP2DF02N9AC3		0.4
	2.5	0.2	0	15	15		130	D	22	13	F	SLP2DF02E9AC3		0.4
	2.5	0.2	0	15	15	12	120	D	22	13	F	SLP2DF02V9AC3		0.4
	3	0.25	0	12	12	10	80	D	22	13	F	SLP2DF02N9A03		0.4
	3	0.25	0	12	12		130	D	22	13	F	SLP2DF02E9A03		0.4
	3	0.25	0	12	12	10	120	D	22	13	F	SLP2DF02V9A03		0.4
	3	0.3	0	6	6	5	80	D	22	13	F	SLP2DF02N1A03	SLP2DF02N3A03	0.46
	3	0.3	0	6	6		130	D	22	13	F	SLP2DF02E1A03	SLP2DF02E3A03	0.46
	3	0.3	0	6	6	5	120	D	22	13	F	SLP2DF02V1A03	SLP2DF02V3A03	0.46
	4	0.4	0	5	5	4	80	D	22	13	F	SLP2DF02N9A04		0.39
	4	0.4	0	5	5		130	D	22	13	F	SLP2DF02E9A04	———	0.39
	4	0.4	0	5	5	4	120	D	22	13	F	SLP2DF02V9A04		0.39
1/4"	1	0.04	0	30	30	25	80	D	22	13	F	SLP2DF02N9B01		0.39
	1	0.04	0	30	30		130	D	22	13	F	SLP2DF02E9B01		0.39
	1	0.04	0	30	30	25	120	D	22	13	F	SLP2DF02V9B01		0.39
	1.5	0.09	0	20	20	15	80	D	22	13	F	SLP2DF02N9BC2		0.39
	1.5	0.09	0	20	20		130	D	22	13	F	SLP2DF02E9BC2		0.39
	1.5	0.09	0	20	20	15	120	D	22	13	F	SLP2DF02V9BC2		0.39
	2.5	0.2	0	15	15	12	80	D	22	13	F	SLP2DF02N9BC3	———	0.39
	2.5	0.2	0	15	15		130	D	22	13	F	SLP2DF02E9BC3		0.39
	2.5	0.2	0	15	15	12	120	D	22	13	F	SLP2DF02V9BC3		0.39
	3	0.25	0	12	12	10	80	D	22	13	F	SLP2DF02N9B03		0.39
	3	0.25	0	12	12		130	D	22	13	F	SLP2DF02E9B03		0.39
	3	0.25	0	12	12	10	120	D	22	13	F	SLP2DF02V9B03		0.39
	3	0.3	0	6	6	5	80	D	22	13	F	SLP2DF02N1B03	SLP2DF02N3B03	0.45
	3	0.3	0	6	6		130	D	22	13	F	SLP2DF02E1B03	SLP2DF02E3B03	0.45
	3	0.3	0	6	6	5	120	D	22	13	F	SLP2DF02V1B03	SLP2DF02V3B03	0.45
	4	0.4	0	5	5	4	80	D	22	13	F	SLP2DF02N9B04		0.38
	4	0.4	0	5	5		130	D	22	13	F	SLP2DF02E9B04		0.38
	4	0.4	0	5	5	4	120	D	22	13	F	SLP2DF02V9B04		0.38

SLP Small Series · 2/2-Way Pilot operated Brass Solenoid Valve · Normally Closed

1: 2-Way normally closed solenoid valve, Closed when de-energized, open when energized.
2: Serialized products, small in size, large flow rate, widely use
3: Body material: forged brass.Orifice: ϕ 10.5mm.
4: Ambient Temp. 0℃~65℃, Fluids Temp: 0℃~130℃ .Max allowable pressure 17 bar.
5: Flow as the arrow, mounts in any position; Best position is solenoid vertical and upright direction.
6: Voltage: 220VAC/230VAC/240VAC/110VAC/24VAC 50/60HZ 24VDC/12VDC; Voltage Tolerance: +10% to -10% applicable voltage
7: This series valves are offered NBR、VITON、EPDM etc For Seals and diaphragm to provide on-off control of various fluids.

Construction, External Dimensions Chart

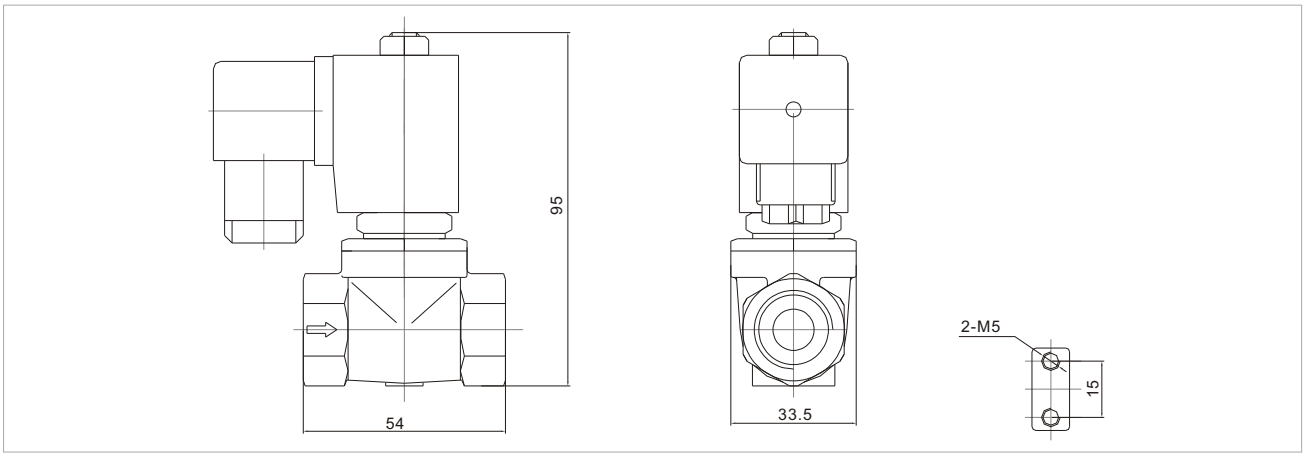

Valve Selection List

Pipe Conn -ection	Orifice mm	CV Factor	Operating pressure differential (kgf/cm²) Min.	Max. Air Gas AC	Max. Air Gas DC	Max. Water Hot water AC	Max. Water Hot water DC	Max. Light oil AC	Max. Light oil DC	Max. Temp. ℃	Coil Type	consumption VA AC 220V	consumption W DC 24V	Coil Class	Model Code Follows Voltage are 220VAC	Weight KG
1/4″	10.5	1.47	0.1	16	10	16	10	13	10	80	D	22	13	F	SLP1DF02N1BC9	0.51
	10.5	1.47	0.1	16	10	16	10			130	D	22	13	F	SLP1DF02E1BC9	0.51
	10.5	1.47	0.1	16	10	16	10	13	10	120	D	22	13	F	SLP1DF02V1BC9	0.51
3/8″	10.5	1.68	0.1	16	10	16	10	13	10	80	D	22	13	F	SLP1DF02N1CC9	0.49
	10.5	1.68	0.1	16	10	16	10			130	D	22	13	F	SLP1DF02E1CC9	0.49
	10.5	1.68	0.1	16	10	16	10	13	10	120	D	22	13	F	SLP1DF02V1CC9	0.49
1/2″	10.5	1.75	0.1	16	10	16	10	13	10	80	D	22	13	F	SLP1DF02N1DC9	0.46
	10.5	1.75	0.1	16	10	16	10			130	D	22	13	F	SLP1DF02E1DC9	0.46
	10.5	1.75	0.1	16	10	16	10	13	10	120	D	22	13	F	SLP1DF02V1DC9	0.46

SLP Brass Series · 2/2-Way Pilot operated Solenoid Valve · Normally Closed

●The Professional Solenoid Valves Manufactory

1: 2-Way normally closed solenoid valve, Closed when de-energized, open when energized.

2: Serialized products, small in size, large flow rate, widely use

3: Body material: forged brass.Orifice: ϕ 10.5mm.

4: Ambient Temp. 0℃~65℃, Fluids Temp: 0℃~130℃, Max allowable pressure 17 bar.

5: Flow as the arrow, mounts in any position; Best position is solenoid vertical and upright direction.

6: Voltage: 220VAC/230VAC/240VAC/110VAC/24VAC 50/60HZ 24VDC/12VDC; Voltage Tolerance: +10% to -10% applicable voltage

7: This series valves are offered NBR、VITON、EPDM etc For Seals and diaphragm to provide on-off control of various fluids.

Normally closed

De-energized
Open

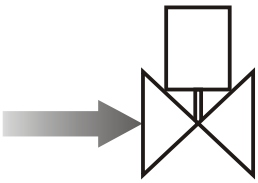

Energized
Closed

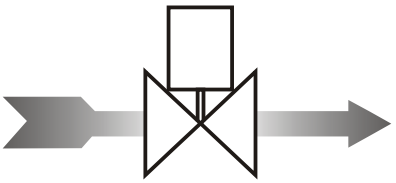

Construction, External Dimensions Chart

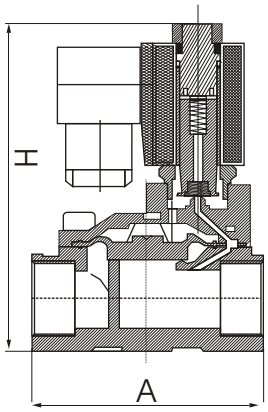

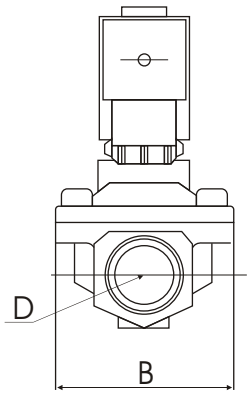

Flow Chart

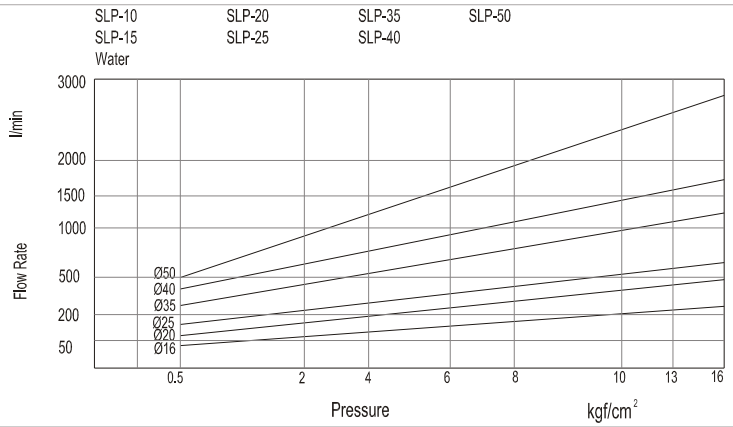

Valve Selection List

Pipe Conn -ection	Orifice mm	CV Factor	Min.	Operating pressure differential (kgf/cm²) Max. Air Gas	Water Hot water Liquids	Light oil ≤ 20CST	Max. Fluids Temp.	Coil Type	Power consumption VA 220 V	W 24 V	Coil Class	External Dimensions Length x Width x Height A x B x H	Weight KG	Model Code Follows Voltage are 220VAC 50/60HZ
3/8″	13	4.5	0.5	13	13	10	80	D	22	13	F	66×48×112	0.8	SLP1DF02N1C13
	13	4.5	0.5	13	13		130	D	22	13	F	66×48×112	0.8	SLP1DF02E1C13
	13	4.5	0.5	13	13	10	120	D	22	13	F	66×48×112	0.8	SLP1DF02V1C13
1/2″	13	4.5	0.5	13	13	10	80	D	22	13	F	66×48×112	0.7	SLP1DF02N1D13
	13	4.5	0.5	13	13		130	D	22	13	F	66×48×112	0.7	SLP1DF02E1D13
	13	4.5	0.5	13	13	10	120	D	22	13	F	66×48×112	0.7	SLP1DF02V1D13
3/4″	20	7.6	0.5	13	13	10	80	D	22	13	F	75×58×118	0.9	SLP1DF02N1E20
	20	7.6	0.5	13	13		130	D	22	13	F	75×58×118	0.9	SLP1DF02E1E20
	20	7.6	0.5	13	13	10	120	D	22	13	F	75×58×118	0.9	SLP1DF02V1E20
1″	25	12	0.5	13	13	10	80	D	22	13	F	96×70×131	1.4	SLP1DF02N1G25
	25	12	0.5	13	13		130	D	22	13	F	96×70×131	1.4	SLP1DF02E1G25
	25	12	0.5	13	13	10	120	D	22	13	F	96×70×131	1.4	SLP1DF02V1G25
11/4″	35	22	0.5	13	13	10	80	D	22	13	F	131×96×146	2.8	SLP1DF02N1H35
	35	22	0.5	13	13		130	D	22	13	F	131×96×146	2.8	SLP1DF02E1H35
	35	22	0.5	13	13	10	120	D	22	13	F	131×96×146	2.8	SLP1DF02V1H35
11/2″	40	30	0.5	13	13	10	80	D	22	13	F	131×96×146	2.7	SLP1DF02N1J40
	40	30	0.5	13	13		130	D	22	13	F	131×96×146	2.7	SLP1DF02E1J40
	40	30	0.5	13	13	10	120	D	22	13	F	131×96×146	2.7	SLP1DF02V1J40
2″	50	48	0.5	13	13	10	80	D	22	13	F	165×120×167	4.8	SLP1DF02N1K50
	50	48	0.5	13	13		130	D	22	13	F	165×120×167	4.8	SLP1DF02E1K50
	50	48	0.5	13	13	10	120	D	22	13	F	165×120×167	4.8	SLP1DF02V1K50

SLP Stainless Steel Series · 2/2Way Pilot Operated Solenoid Valve · Normally Closed

●The Professional Solenoid Valves Manufactory

1: 2-Way normally closed solenoid valve, Closed when de-energized, open when energized.
2: Body material: 316 stainless steel
3: Max. Pressure 17kgf/cm^2; Ambient Temp. 0℃~65℃
4: Serialized products, small in size, large flow rate, widely use
5: Flow as the arrow, mounts in any position; Best position is Solenoid vertical and upright direction.
6: Voltage: 220VAC/230VAC/240VAC/110VAC/24VAC 50/60HZ 24VDC/12VDC;
Voltage Tolerance: +10% to -10% applicable voltage
7: Coil can fix Germany Nass Coil, for orifice under DN25 only.
8: This series valves are offered NBR、VITON、EPDM etc
for Seals and diaphragm to provide on-off control of various fluids.

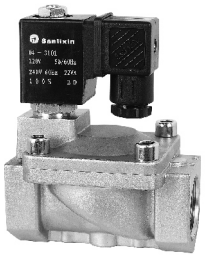

Valve Selection List

Pipe Conn -ection	Orifice mm	CV Factor	Min.	Operating pressure differential (kgf/cm^2) Max. Air Gas	Water Hot water Liquids	Light oil ≤ 20CST	Max. Fluids Temp.	Coil Type	Power consumption VA 220 V	W 24 V	Coil Class	External Dimensions Length x Width x Height A x B x H	Weight KG	Model Code Follows Voltage are 220VAC 50/60HZ
3/8″	13	4.5	0.5	13	13	10	80	D	22	13	F	66×48×112	0.75	SLP1DF02N3C13
	13	4.5	0.5	13	13		130	D	22	13	F	66×48×112	0.75	SLP1DF02E3C13
	13	4.5	0.5	13	13	10	120	D	22	13	F	66×48×112	0.75	SLP1DF02V3C13
1/2″	13	4.5	0.5	13	13	10	80	D	22	13	F	66×48×112	0.7	SLP1DF02N3D13
	13	4.5	0.5	13	13		130	D	22	13	F	66×48×112	0.7	SLP1DF02E3D13
	13	4.5	0.5	13	13	10	120	D	22	13	F	66×48×112	0.7	SLP1DF02V3D13
3/4″	20	7.6	0.5	13	13	10	80	D	22	13	F	75×58×118	0.9	SLP1DF02N3E20
	20	7.6	0.5	13	13		130	D	22	13	F	75×58×118	0.9	SLP1DF02E3E20
	20	7.6	0.5	13	13	10	120	D	22	13	F	75×58×118	0.9	SLP1DF02V3E20
1″	25	12	0.5	13	13	10	80	D	22	13	F	96×70×131	1.3	SLP1DF02N3G25
	25	12	0.5	13	13		130	D	22	13	F	96×70×131	1.3	SLP1DF02E3G25
	25	12	0.5	13	13	10	120	D	22	13	F	96×70×131	1.3	SLP1DF02V3G25
1 1/4″	35	22	0.5	13	13	10	80	D	22	13	F	131×96×146	2.6	SLP1DF02N3H35
	35	22	0.5	13	13		130	D	22	13	F	131×96×146	2.6	SLP1DF02E3H35
	35	22	0.5	13	13	10	120	D	22	13	F	131×96×146	2.6	SLP1DF02V3H35
1 1/2″	40	30	0.5	13	13	10	80	D	22	13	F	131×96×146	2.5	SLP1DF02N3J40
	40	30	0.5	13	13		130	D	22	13	F	131×96×146	2.5	SLP1DF02E3J40
	40	30	0.5	13	13	10	120	D	22	13	F	131×96×146	2.5	SLP1DF02V3J40
2″	50	48	0.5	13	13	10	80	D	22	13	F	165×120×167	4.4	SLP1DF02N3K50
	50	48	0.5	13	13		130	D	22	13	F	165×120×167	4.4	SLP1DF02E3K50
	50	48	0.5	13	13	10	120	D	22	13	F	165×120×167	4.4	SLP1DF02V3K50

SLP Stainless Steel Series · 2/2Way Pilot Operated Solenoid Valve · Normally Closed

Valve Selection List

Pipe Conn -ection	Orifice mm	CV Factor	Min.	Operating pressure differential (kgf/cm²) Max. Air Gas	Water Hot water Liquids	Light oil ≤ 20CST	Max. Fluids Temp.	Coil Type	Power consumption VA AC 220 V	W DC 24 V	Coil Class	External Dimensions Length x Width x Height A x B x H	Weight KG	Model Code Follows Voltage are 220VAC 50/60HZ
Flange 4 Holes	25	12	0.5	13	13	13	80	D	22	13	F	134×110×160	2.7	SLP1DF02N3F25
	25	12	0.5	13	13		130	D	22	13	F	134×110×160	2.7	SLP1DF02E3F25
	25	12	0.5	13	13	13	120	D	22	13	F	134×110×160	2.7	SLP1DF02V3F25
Flange 4 Holes	35	22	0.5	13	13	13	80	D	22	13	F	160×135×175	5	SLP1DF02N3F35
	35	22	0.5	13	13		130	D	22	13	F	160×135×175	5	SLP1DF02E3F35
	35	22	0.5	13	13	13	120	D	22	13	F	160×135×175	5	SLP1DF02V3F35
Flange 4 Holes	40	30	0.5	13	13	13	80	D	22	13	F	160×145×180	5.3	SLP1DF02N3F40
	40	30	0.5	13	13		130	D	22	13	F	160×145×180	5.3	SLP1DF02E3F40
	40	30	0.5	13	13	13	120	D	22	13	F	160×145×180	5.3	SLP1DF02V3F40
Flange 4 Holes	50	48	0.5	13	13	13	80	D	22	13	F	200×160×207	7.9	SLP1DF02N3F50
	50	48	0.5	13	13		130	D	22	13	F	200×160×207	7.9	SLP1DF02E3F50
	50	48	0.5	13	13	13	120	D	22	13	F	200×160×207	7.9	SLP1DF02V3F50

SLP Series 2/2-Way Pilot Operated Solenoid Valve

●The Professional Solenoid Valves Manufactory

Components Chart

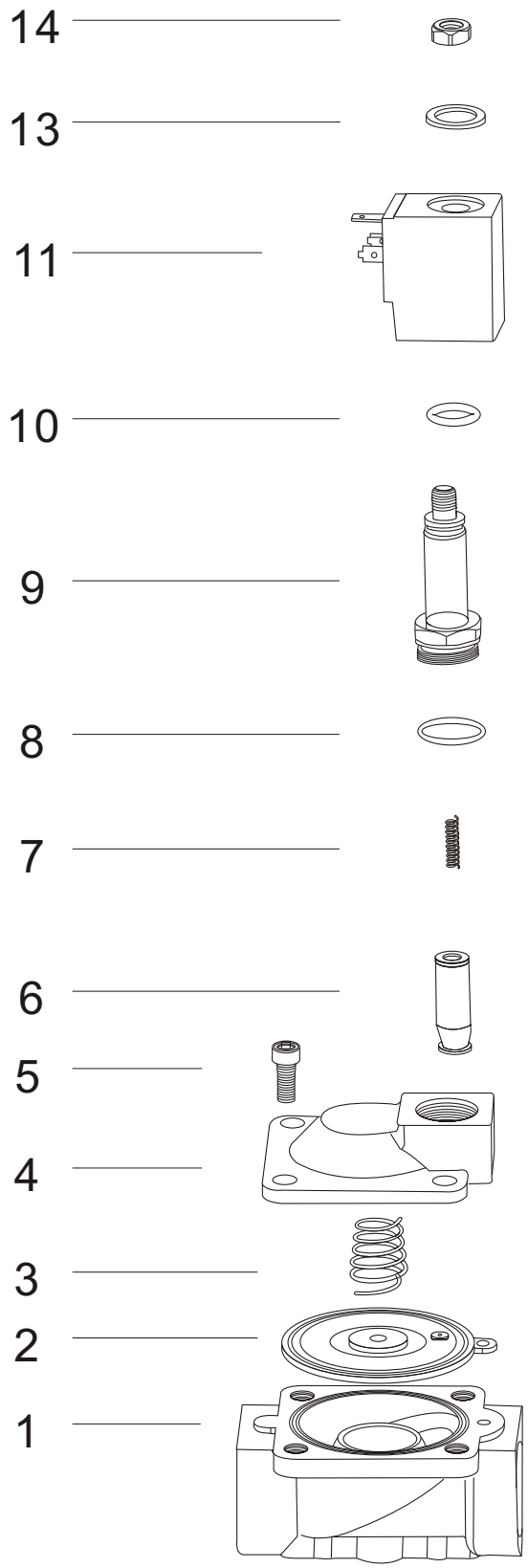

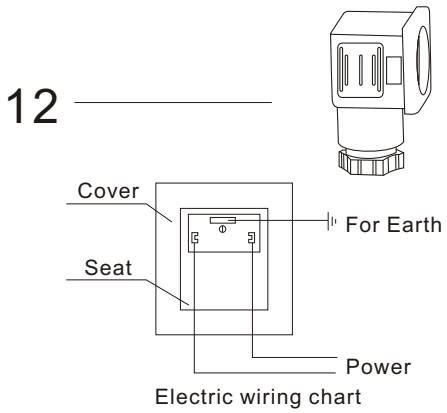

Code	Components
01	Valve Body
02	Diaphragm
03	Diaphragm Spring
04	Valve Cover
05	Screw
06	Plunger Assembly
07	Plunger Spring
08	O Ring Φ21×1.5
09	Plunger Tube Assembly
10	O Ring Φ16×2.0
11	Coil
12	Plug
13	Gasket
14	Locknut

SLP Brass Series · 2/2-Way Pilot Operated Solenoid Valve · Normally Open

1: 2-Way normally open solenoid valve;
Open when de-energized, closed when energized.

2: Body material: brass

3: Max. Pressure 12kgf/cm^2; A mbient Temp. 0℃~65℃

4: Serialized products, small in size, large flow rate, widely use.

5: Flow as the arrow, mounts in any position; Best position is
Solenoid vertical and upright direction.

6: Voltage: 220VAC/230VAC/240VAC/110VAC/24VAC 50/60HZ 24VDC/12VDC;
Voltage Tolerance: +10% to -10% applicable voltage.

7: This series valves are offered NBR, VITON, EPDM etc for
Seals and diaphragm to provide on-off control of various fluids.

Nomally Open

Construction, External Dimensions Chart

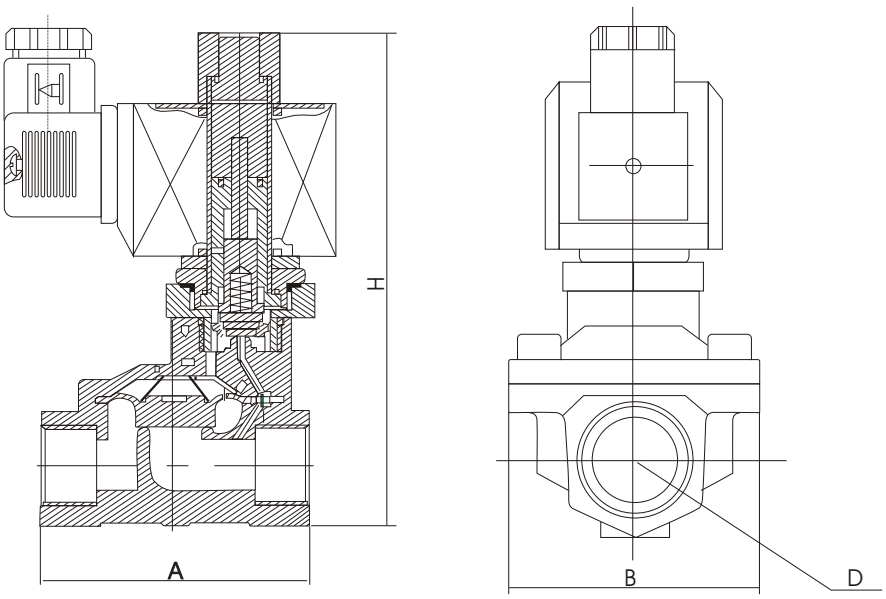

SLP Brass Series · 2/2-Way Pilot Operated Solenoid Valve · Normally Open

●The Professional Solenoid Valves Manufactory

Valve Selection List

Pipe Conn -ection	Orifice mm	CV Factor	Min.	Operating pressure differential (kgf/cm²) Max. Air Gas	Water Hot water Liquids	Light oil ≤ 20CST	Max. Fluids Temp.	Coil Type	Power consumption VA AC 220 V	W DC 24 V	Coil Class	External Dimensions Length x Width x Height A x B x H	Weight KG	Model Code Follows Voltage are 220VAC 50/60HZ
3/8″	13	4.5	0.5	8	8	7	80	D	33	32	F	66×48×124	0.9	SLP2DF02N1C13
	13	4.5	0.5	8	8		120	D	33	32	F	66×48×124	0.9	SLP2DF02E1C13
	13	4.5	0.5	8	8	7	120	D	33	32	F	66×48×124	0.9	SLP2DF02V1C13
1/2″	13	4.5	0.5	8	8	7	80	D	33	32	F	66×48×124	0.9	SLP2DF02N1D13
	13	4.5	0.5	8	8		120	D	33	32	F	66×48×124	0.9	SLP2DF02E1D13
	13	4.5	0.5	8	8	7	120	D	33	32	F	66×48×124	0.9	SLP2DF02V1D13
3/4″	20	7.6	0.5	8	8	7	80	D	33	32	F	75×58×130	1.1	SLP2DF02N1E20
	20	7.6	0.5	8	8		120	D	33	32	F	75×58×130	1.1	SLP2DF02E1E20
	20	7.6	0.5	8	8	7	120	D	33	32	F	75×58×130	1.1	SLP2DF02V1E20
1″	25	12	0.5	8	8	7	80	D	33	32	F	96×70×143	1.6	SLP2DF02N1G25
	25	12	0.5	8	8		120	D	33	32	F	96×70×143	1.6	SLP2DF02E1G25
	25	12	0.5	8	8	7	120	D	33	32	F	96×70×143	1.6	SLP2DF02V1G25
1 1/4″	35	22	0.5	8	8	7	80	D	33	32	F	131×96×158	3	SLP2DF02N1H35
	35	22	0.5	8	8		120	D	33	32	F	131×96×158	3	SLP2DF02E1H35
	35	22	0.5	8	8	7	120	D	33	32	F	131×96×158	3	SLP2DF02V1H35
1 1/2″	40	30	0.5	8	8	7	80	D	33	32	F	131×96×158	2.8	SLP2DF02N1J40
	40	30	0.5	8	8		120	D	33	32	F	131×96×158	2.8	SLP2DF02E1J40
	40	30	0.5	8	8	7	120	D	33	32	F	131×96×158	2.8	SLP2DF02V1J40
2″	50	48	0.5	8	8	7	80	D	33	32	F	165×120×179	5	SLP2DF02N1K50
	50	48	0.5	8	8		120	D	33	32	F	165×120×179	5	SLP2DF02E1K50
	50	48	0.5	8	8	7	120	D	33	32	F	165×120×179	5	SLP2DF02V1K50

SLP Stainless Steel Series · 2/2Way Pilot Operated Solenoid Valve · Normally Open

1: 2-Way normally open solenoid valve; Open when de-energized, closed when energized.
2: Body material: 316 stainless steel
3: Max. Pressure 12kgf/cm², A mbient Temp. 0℃~65℃
4: Serialized products, small in size, large flow rate, widely use.
5: Flow as the arrow, mounts in any position; Best position is Solenoid vertical and upright direction.
6: Voltage: 220VAC/230VAC/240VAC/110VAC/24VAC 50/60HZ 24VDC/12VDC; Voltage Tolerance: +10% to -10% applicable voltage.
7: This series valves are offered NBR、VITON、EPDM etc for Seals and diaphragm to provide on-off control of various fluids.

Valve Selection List

Pipe Conn -ection	Orifice mm	CV Factor	Min.	Operating pressure differential (kgf/cm²) Max. Air Gas	Water Hot water Liquids	Light oil ≤ 20CST	Max. Fluids Temp.	Coil Type	Power consumption VA AC 220 V	W DC 24 V	Coil Class	External Dimensions Length x Width x Height A x B x H	Weight KG	Model Code Follows Voltage are 220VAC 50/60HZ
3/8″	13	4.5	0.5	8	8	7	80	D	33	32	F	66×48×124	0.95	SLP2DF02N3C13
	13	4.5	0.5	8	8		120	D	33	32	F	66×48×124	0.95	SLP2DF02E3C13
	13	4.5	0.5	8	8	7	120	D	33	32	F	66×48×124	0.95	SLP2DF02V3C13
1/2″	13	4.5	0.5	8	8	7	80	D	33	32	F	66×48×124	0.9	SLP2DF02N3D13
	13	4.5	0.5	8	8		120	D	33	32	F	66×48×124	0.9	SLP2DF02E3D13
	13	4.5	0.5	8	8	7	120	D	33	32	F	66×48×124	0.9	SLP2DF02V3D13
3/4″	20	7.6	0.5	8	8	7	80	D	33	32	F	75×58×130	1.1	SLP2DF02N3E20
	20	7.6	0.5	8	8		120	D	33	32	F	75×58×130	1.1	SLP2DF02E3E20
	20	7.6	0.5	8	8	7	120	D	33	32	F	75×58×130	1.1	SLP2DF02V3E20
1″	25	12	0.5	8	8	7	80	D	33	32	F	96×70×143	1.5	SLP2DF02N3G25
	25	12	0.5	8	8		120	D	33	32	F	96×70×143	1.5	SLP2DF02E3G25
	25	12	0.5	8	8	7	120	D	33	32	F	96×70×143	1.5	SLP2DF02V3G25
1 1/4″	35	22	0.5	8	8	7	80	D	33	32	F	131×96×158	2.8	SLP2DF02N3H35
	35	22	0.5	8	8		120	D	33	32	F	131×96×158	2.8	SLP2DF02E3H35
	35	22	0.5	8	8	7	120	D	33	32	F	131×96×158	2.8	SLP2DF02V3H35
1 1/2″	40	30	0.5	8	8	7	80	D	33	32	F	131×96×158	2.7	SLP2DF02N3J40
	40	30	0.5	8	8		120	D	33	32	F	131×96×158	2.7	SLP2DF02E3J40
	40	30	0.5	8	8	7	120	D	33	32	F	131×96×158	2.7	SLP2DF02V3J40
2″	50	48	0.5	8	8	7	80	D	33	32	F	165×120×179	4.6	SLP2DF02N3K50
	50	48	0.5	8	8		120	D	33	32	F	165×120×179	4.6	SLP2DF02E3K50
	50	48	0.5	8	8	7	120	D	33	32	F	165×120×179	4.6	SLP2DF02V3K50

SLP Stainless Steel Series · 2/2Way Pilot Operated Solenoid Valve · Normally Open

●The Professional Solenoid Valves Manufactory

Valve Selection List

Pipe Conn -ection	Orifice mm	CV Factor	Min.	Operating pressure differential (kgf/cm²) Max. Air Gas	Water Hot water Liquids	Light oil ≤ 20CST	Max. Fluids Temp.	Coil Type	Power consumption VA AC 220 V	W DC 24 V	Coil Class	External Dimensions Length x Width x Height A x B x H	Weight KG	Model Code Follows Voltage are 220VAC 50/60HZ
Flange 4 Holes	25	12	0.5	8	8	7	80	D	33	32	F	134×110×172	2.9	SLP2DF02N3F25
	25	12	0.5	8	8		120	D	33	32	F	134×110×172	2.9	SLP2DF02E3F25
	25	12	0.5	8	8	7	120	D	33	32	F	134×110×172	2.9	SLP2DF02V3F25
Flange 4 Holes	35	22	0.5	8	8	7	80	D	33	32	F	160×135×187	5.2	SLP2DF02N3F35
	35	22	0.5	8	8		120	D	33	32	F	160×135×187	5.2	SLP2DF02E3F35
	35	22	0.5	8	8	7	120	D	33	32	F	160×135×187	5.2	SLP2DF02V3F35
Flange 4 Holes	40	30	0.5	8	8	7	80	D	33	32	F	160×145×192	5.5	SLP2DF02N3F40
	40	30	0.5	8	8		120	D	33	32	F	160×145×192	5.5	SLP2DF02E3F40
	40	30	0.5	8	8	7	120	D	33	32	F	160×145×192	5.5	SLP2DF02V3F40
Flange 4 Holes	50	48	0.5	8	8	7	80	D	33	32	F	200×160×219	8.1	SLP2DF02N3F50
	50	48	0.5	8	8		120	D	33	32	F	200×160×219	8.1	SLP2DF02E3F50
	50	48	0.5	8	8	7	120	D	33	32	F	200×160×219	8.1	SLP2DF02V3F50

SLP Series 2/2-Way Pilot Operated Solenoid Valve

SLP Series Coils Characteristics List

Coils Model Code	Voltage	Power consumption					Suitable Valve Model
		50HZ VA		60HZ VA		DC	
		Inrush	Holding	Inrush	Holding	W	
D04-3101 N04-3101	AC220V	55	22	55	18	—	SLP Normally Closed Series SLP micro Normally Open Series
D04-3102 N04-3102	AC110V	55	22	55	18		
D04-3104 N04-3104	AC24V	45	18	45	15		
D04-3106 N04-3106	DC24V	—				13	
D04-3107 N04-3107	DC12V					13	
D01-4101 N01-4101	AC220V	82	33	82	28	—	SLP Normally Open Series
D01-4102 N01-4102	AC110V	82	33	82	28		
D03-5101 N03-5101	DC24V	—				32	
D03-5102 N03-5102	DC12V					28.5	